Manual

Control Unit MIO1616

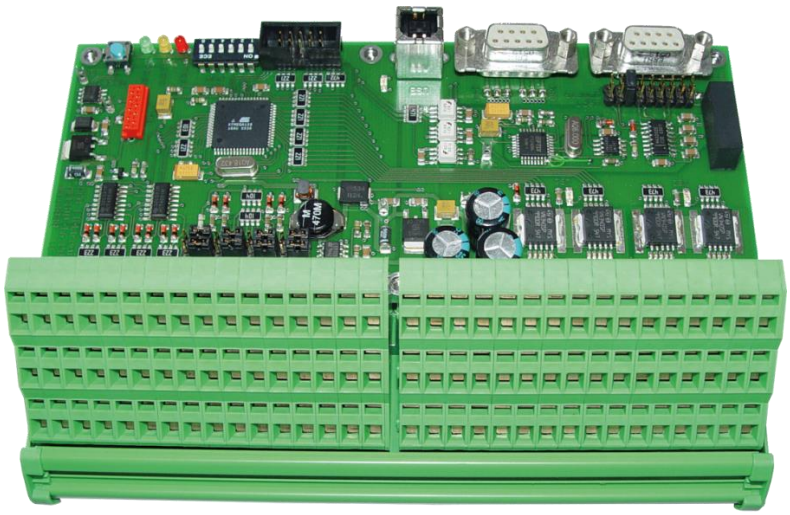

GET IN touch WITH SENSITIVE TESTING

Softline

Modline

Conline

Boardline

Avidline

Pixline

Application

MCD Elektronik GmbH
Hoheneichstr. 52
75217 Birkenfeld
Tel. +49 (0) 72 31/78 405-0
Fax +49 (0) 72 31/78 405-10
info@mcd-elektronik.de
www.mcd-elektronik.com
HQ: Birkenfeld
Managing CEO: Bruno Hörter
Register Court Mannheim
HRB 505692

Template version: 5.4 / 2018-04-09
V 1.0 2018-08-29 MR (JJ)

Table of Contents

1. GENERAL 4

1.1. EQUIPMENT AND FUNCTIONS 4

2. EXTENT OF DELIVERY 4

3. SAFETY INSTRUCTIONS 4

4. SERIAL 16 BIT INPUT / OUTPUT MODULE FOR TOP HAT RAIL 5

4.1. PIN ASSIGNMENT 3 STOCK TERMINAL STRIP MIO1616 AND DIMENSIONS 5

4.1.1. ST3 5

4.1.2. ST4 5

4.2. PIN ASSIGNMENT 6

4.2.1. ST3: 3 Stock Terminal Block 6

4.2.2. ST4: 3 Stock Terminal Block 7

4.2.3. RS232 - IN: D - SUB 9 Pol BU 7

4.2.4. RS232 - OUT: D - SUB 9 Pol BU 8

4.2.5. USB Form B 8

4.2.6. IO Pin Strip 10 Pol 8

4.3. LAYOUT DIAGRAM 9

5. COMMAND SET 10

5.1. GENERAL REGULATION 10

5.1.1. General Command Standard Syntax 10

5.1.2. General Answer 10

5.1.3. Maximum Length of Data of Transmission 11

5.1.4. Type Definition 11

5.1.5. ERROR Code 11

5.1.6. MIO1616 Firmware Update via Serial Interface 12

5.1.7. Implementation of Instructions with Different SW Versions 13

5.1.8. Command 10: Read INPUTS + OUTPUTS 16 Bit 14

5.1.9. Command 11: Read ADW'S 8 Bit / 10 Bit 15

5.1.10. Command 12: INPUTS - Set Trigger Conditions to Input Sample 17

5.1.11. INPUTS: Set Trigger of Input Sample On / Off 16 Bit via EEPROM Cell 18

5.1.12. Command 15: COUNTER - INPUTS 19

5.1.13. OUTPUT - Configure Status after Power Up Via EEPROM 20

5.1.14. Command 20: Set 24 V Output Byte - serially 16 Bit 21

5.1.15. Command 21: Set 24 V Output Bit - serially 16 - Bit 21

5.1.16. Command 22: Set 24 V Output Bit - serially Flashing 16 Bit 22

5.1.17. Command 24: Issue 24 V OUTPUT Channel 1 + 2 PWM 24

5.1.18. Command 25: Set 24 V INPUT Trigger Threshold with DAW 8 Bit 25

5.1.19. Command 28: Monitor Mechanical Process via Timeout 25

5.1.20. Command 30: Control M5450 MCD Serial Cards 28

5.1.21. Command 32: 3 - Wire - Data Output Via I^2C EXTERN Ports 29

5.1.22. Command 34: Initialize LCD 30

*5.1.23. Command 35: Output LCD POS * TEXT 30*

5.1.24. Command 3A: Write EEPROM 1 max. 00..FF = 256 BYTES (on the Controller) 31

5.1.25. Command 3B: Read EEPROM 1 max. 00..FF = 256 BYTES (on the Controller) 32

5.1.26. Command 3F: Read SW VERSION Firmware 32

5.1.27. I^2C General Operation 33

5.1.28. Command 40: Output I^2C External Start Conditions 33

5.1.29. Command 41: Output I^2C External Stop Conditions 34

5.1.30. Command 42: Send I^2C External Data 34

5.1.31. Command 43: Read I^2C External Data 35

5.1.32. Command 44: I^2C External Universal Input / Output (Execute) 36

5.1.33. Command 46: Set PCF8574 I^2C Extern Bit - Serially 8 Bit 37

5.1.34. Command 47: Read PCF8574 I^2C EXTERN 8 Bit 38

5.1.35. Command 48: Read I^2C EXTERN KEYDECODER MATRIX 5 x 4 39

5.1.36. Command 4A: Write EEPROM Universal (Incompatible) 41

5.1.37. Command 4B: Read EEPROM Universal (Incompatible for PIC) 42

6. TECHNICAL DATA 44

1. General

The MCD Control Unit MIO1616 is used for activation and inspection of pneumatically or electrically driven components.

The control takes place optionally per USB, RS232 or RS485.

Each interface can be used as master converter from USB to RS232 / RS485.

1.1. Equipment and Functions

- 16 x inputs / outputs
- 4 x input as fast event counter / trigger to 10 kHz
- 2 x outputs as PWM generator from 10 to 250 Hz,0 to 100%
- 4 x ADC inputs, range 0 to 10 V, 10 bit
- Programmable trigger function on input pattern
- Separate supply of operating voltages for output 1 to 8, output 9 to 16 and supply of control electronics
- Supply voltage and EA voltage 12..24 V possible
- Universal IO interface for the control of I^2C interfaces, DOT - matrix - displays
- Storage of values in a non - volatile memory (EEPROM)
- Drive of external modules through I²C interface
- Text output on DOT - matrix optional possible
- Operation of several systems via addressable, serial interface
- Mounting on rail is possible

Order number: # 7587 - V3

2. Extent of Delivery

Version with 16 IO‘s, ADC, I²C bus and LCD interface:

- Control with terminal block for outputs, sensors, power supply, etc.
- Ready - made cable with power adapter optional
- Control software for commissioning
- Universal COM server (UCS) software for complex applications

3. Safety Instructions

The Control Unit MIO1616 is used for triggering and controlling pneumatically or electrically powered components. The product has been tested with great care.

However, no liability is accepted for any damage caused by the use of the product. All trademarks, which are mentioned in the documentation, are protected by copyright and are the property of their respective owners.

4. Serial 16 Bit Input / Output Module for Top Hat Rail

4.1. Pin Assignment 3 Stock Terminal Strip MIO1616 and Dimensions

4.1.1. ST3

GND	Analog IN 1	GND	Analog IN 2	GND	Analog IN 3	GND	Analog IN 4	GND 24V				Us Out 1..8	Us Out 9..16	UB Control + Inputs	
								GND	+24V	+24V	+24V	+24V	+24V	+24 V	+24V
1.3	**2.3**	**3.3**	**4.3**	**5.3**	**6.3**	**7.3**	**8.3**	**9.3**	**10.3**	**11.3**	**12.3**	**13.3**	**14.3**	**15.3**	**16.3**
OUT1	OUT2	OUT3	OUT4	OUT5	OUT6	OUT7	OUT8	OUT 9	OUT 10	OUT 11	OUT 12	OUT 13	OUT 14	OUT 15	OUT 16
1.2	**2.2**	**3.2**	**4.2**	**5.2**	**6.2**	**7.2**	**8.2**	**9.2**	**10.2**	**11.2**	**12.2**	**13.2**	**14.2**	**15.2**	**16.2**
GND	GND	GND	GND	GND	GND	GND	GND	GND	GND	GND	GND	GND	GND	GND	GND
1.1	**2.1**	**3.1**	**4.1**	**5.1**	**6.1**	**7.1**	**8.1**	**9.1**	**10.1**	**11.1**	**12.1**	**13.1**	**14.1**	**15.1**	**16.1**

4.1.2. ST4

+24V	+24V	+24V	+24V	+24V	+24V	+24V	+24V	+24V	+24V	+24V	+24V	+24V	+24V	+24V	+24V
1.3	**2.3**	**3.3**	**4.3**	**5.3**	**6.3**	**7.3**	**8.3**	**9.3**	**10.3**	**11.3**	**12.3**	**13.3**	**14.3**	**15.3**	**16.3**
IN1	IN2	IN3	IN4	IN5	IN6	IN7	IN8	IN9	IN10	IN11	IN12	IN13	IN14	IN15	IN16
1.2	**2.2**	**3.2**	**4.2**	**5.2**	**6.2**	**7.2**	**8.2**	**9.2**	**10.2**	**11.2**	**12.2**	**13.2**	**14.2**	**15.2**	**16.2**
GND	GND	GND	GND	GND	GND	GND	GND	GND	GND	GND	GND	GND	GND	GND	GND
1.1	**2.1**	**3.1**	**4.1**	**5.1**	**6.1**	**7.1**	**8.1**	**9.1**	**10.1**	**11.1**	**12.1**	**13.1**	**14.1**	**15.1**	**16.1**

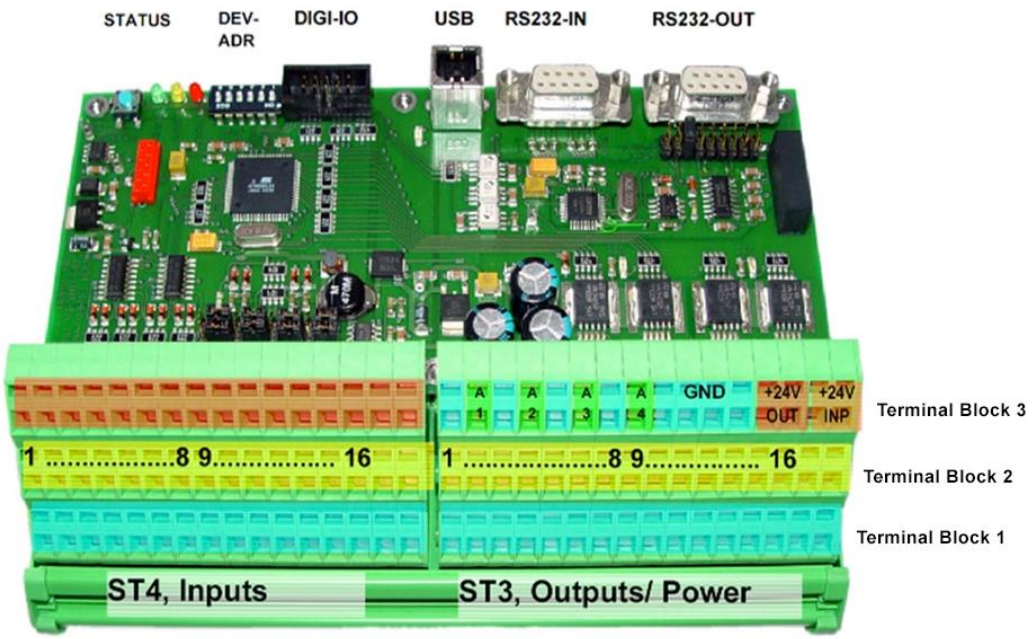

Figure 1: Mechanic Dimensions and Detailed Image of MIO1616

4.2. Pin Assignment

4.2.1. ST3: 3 Stock Terminal Block

Terminal	Signal	Terminal	Signal	Terminal	Signal
1.1	GND	1.2	OUT1 PWM1 (10 Hz..250 Hz) 8 bit Frequency PWM1 = PWM2	1.3	GND
2.1		2.2	OUT2 PWM2 (10 Hz..250 Hz) 8 bit Frequency PWM1 = PWM2	2.3	Analog IN1 (8/10Bit) 0..10 V Alternative coding resistor 0..10 kOhm
3.1		3.2	OUT3	3.3	GND
4.1		4.2	OUT4	4.3	Analog IN2 (8 / 10 Bit) 0..10 V Alternative coding resistor 0..10 kOhm
5.1		5.2	OUT5	5.3	GND
6.1		6.2	OUT6	6.3	Analog IN3 (8 / 10 Bit) 0..10 V Alternative coding resistor 0..10 kOhm
7.1		7.2	OUT7	7.3	GND
8.1		8.2	OUT8	8.3	Analog IN4 (8 / 10Bit) 0..10 V Alternative coding resistor 0..10 kOhm
9.1		9.2	OUT9	9.3	GND (of power supply treatment)
10.1		10.2	OUT10	10.3	
11.1		11.2	OUT11	11.3	
12.1		12.2	OUT12	12.3	
13.1		13.2	OUT13	13.3	Use for outputs 1..8 (10..32 V / 5 A)
14.1		14.2	OUT14	14.3	Use for outputs 9..16 (10..32 V / 5 A)
15.1		15.2	OUT15	15.3	Ub supply UB inputs and control outputs (10..32 V / 5 A)
16.1		16.2	OUT16	16.3	

4.2.2. ST4: 3 Stock Terminal Block

Terminal	Signal	Terminal	Signal	Terminal	Signal
1.1	GND	1.2	IN1 (counter max 5 KHz / trigger Input1)	1.3	UBout supply initiators (10..32 V / 5 A) Current limit by poly switch after 15 sec. overlaod. Recovery time <= 1 min
2.1		2.2	IN2 (counter max 5 KHz / trigger Input2)	2.3	
3.1		3.2	IN3 (counter max 5 KHz / trigger Input3)	3.3	
4.1		4.2	IN4 (counter max 5 KHz / trigger Input4)	4.3	
5.1		5.2	IN5	5.3	
6.1		6.2	IN6	6.3	
7.1		7.2	IN7	7.3	
8.1		8.2	IN8	8.3	
9.1		9.2	IN9	9.3	
10.1		10.2	IN10	10.3	
11.1		11.2	IN11	11.3	
12.1		12.2	IN12	12.3	
13.1		13.2	IN13	13.3	
14.1		14.2	IN14	14.3	
15.1		15.2	IN15	15.3	
16.1		16.2	IN16	16.3	

4.2.3. RS232 - IN: D - SUB 9 Pol BU

Via "*UBextern*" 24 V can be implemented for the control (only permitted with small load currents, close solder briges).

To providing the ouputs of the terminal block ST3 connect 13.1, 14.2, 15.1.

1	UB extern
2	TXD - RS232 / P - RS485
3	RXD - RS232 / M - RS485
4	GND UB
5	GND RS232
6	UB extern
7	UB extern
8	GND UB
9	GND UB

4.2.4. RS232 - OUT: D - SUB 9 Pol BU

1	UB extern
2	RXD - RS232 / P - RS485
3	TXD - RS232 / M - RS485
4	GND UB
5	GND RS232
6	UB extern
7	UB extern
8	GND UB
9	GND UB

4.2.5. USB Form B

1	5 V USB (for reset only)
2	D -
3	D +
4	GND USB = RS232

4.2.6. IO Pin Strip 10 Pol

The LCD contrast has to be created by a separate, negative tension.

LCD illumination is not allowed over *"+ 5 V out"* → Use *"UB ext. OUT"* with adequate series resistor.

DSUB 9 Pol BU	10pol	LCD	MCDBUS	IIC	µP Port
1	1	DATA7	A2		PD5
6	2	DATA6	A1		PD4
2	3	LCDEN	DATA	SDA	PD0
7	4	LCDRS	CLOCK	SCL	PD1
3	5	DATA4	DLEN		PD2
8	6	DATA5	A0		PD3
4	7	UB ext. out (24 V)	UB ext. out (24 V)	UB ext. out (24 V)	UB ext. out (24 V)
9	8	+ 5 V out (0.2 A)	+ 5 V out (0.2 A)	+ 5 V out (0.2 A)	+ 5 V out (0.2 A)
5	9	GND	GND	GND	GND

4.3. Layout Diagram

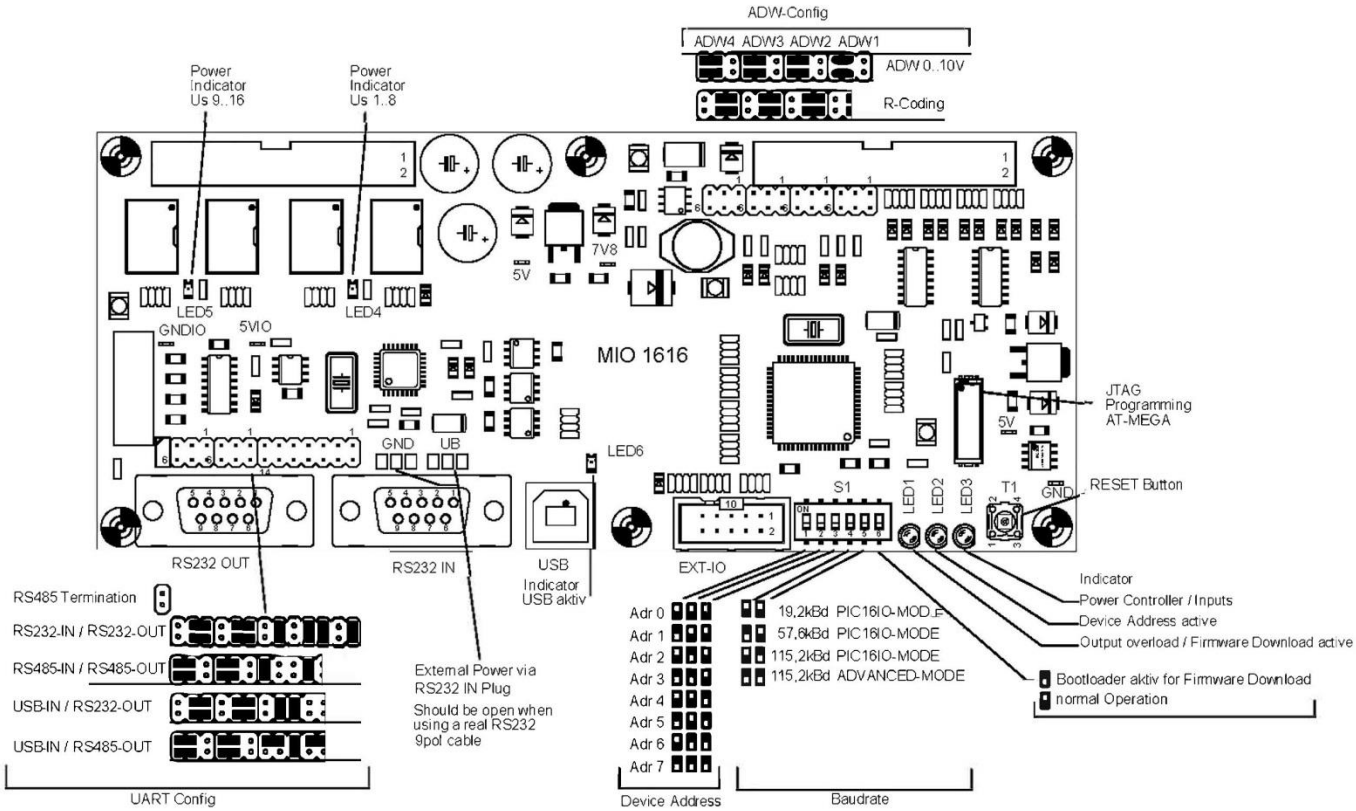

Figure 2: Layout Diagram MIO1616

5. Command Set

5.1. General Regulation

Baud rate: 19200Bd / 57600Bd / 115200Bd, 8 Data, 1 Stop, no parity, no HW handshake

$12 is sent as a start signal.

Address Nibble = ‘0..7‘ adjustable via Jumper.

Length byte is the number of ASCII symbols (Char) sent, beginning with the CMD byte.

$0D is sent at the end or as a termination character.

5.1.1. General Command Standard Syntax

Command: „?“ corresponds to an ASCII character

Data	*Parameter*	*Description*	*Value*	*Value Range*	*Information*
$12	Trig.	Trigger sign			Trigger sign for interface
?	Addr Nibble	Device address		$20..$7E	All printable ASCII signs default ASCII „0..7“
??	LENbyte	Length byte [u08]		2..255	Number of ASCII signs starting with CMD - Byte bis Data - Byte n
??	CMDbyte	Command code [u08]			Command code sh. command
??	Dbyte1				
$0D	Term.	Termination			End sign

5.1.2. General Answer

Answer: With correct command parameterization

Data	*Parameter*	*Description*	*Value*	*Value range*	*Information*
$12	Trig.	Trigger sign			Trigger sign for interface
?	Addr Nibble	Device address		$20..$7E	Repetition of device address within the answer
??	CMDbyte	Command code [u08]			Repetition of the command code within the answer
??	Dbyte1				
$0D	Term.	Termination			End sign

Answer: For errors in command parameterization

Data	*Parameter*	*Description*	*Value*	*Value range*	*Information*
$12	Trig.	Trigger sign			Trigger sign fo interface
?	Addr Nibble	Device address		$20..$7E	Repetition of device address within the answer
FF	CMDbyte	ERROR [u08]			Default „FF“ for error
??	Fehlerbyte	Error code [u08]			Error code
$0D	Term.	Termination			End sign

5.1.3. Maximum Length of Data of Transmission

On commands without determined length as for example LCD text output not more than 127 data bytes may follow (254 ASCII symbols high byte / low byte) after instruction byte (CMD byte).

5.1.4. Type Definition

Data Type	*Abbreviation*
unsigned char	u08
signed char	s08
unsigned short	u16
signed short	s16
unsigned long	u32
signed long	s32
float	f32

5.1.5. ERROR Code

Data Type	*Abbreviation*
ERROR	0 x FF
NOERROR	0 x 00
NOCMD	0 x 01
SYNTAX	0 x 02
PARAMS	0 x 03
WERTEBEREICH	0 x 04
CMDLEN	0 x 05
CHECKSUM	0 x 06
TIMEOUT	0 x 07

5.1.6. MIO1616 Firmware Update via Serial Interface

The MIO1616 owns a bootloader function. If necessary serial interface firmware updates can be loaded via this function.

Procedure:

1. Turn bit 6 *„ON“* via switch S1 → LED1 (red) lights
2. Then confirm RESET button → LED2 (orange) lights → Bootloader mode is active
3. Connect the serial interface of MIO1616 to a COM 1..4.
4. Starting the Program *„AVRprog.exe“*. The program is searching in the sector of COM 1..4 for a MIO1616 control.
5. Choose the new firmware via operation interface (Browse…).
6. Flash the new firmware: press button *“Program“*
7. A progress bar appears, which shows the status of programming.
8. After the successful programming the tool can be closed.
9. Turn bit 6 *„OFF“* via switch S1. → LED1 (red) deactivated
10. Then confirm RESET button → LED2 (orange) 3 x flash → Bootloader mode deactivated, programming finished successfully.

5.1.7. Implementation of Instructions with Different SW Versions

Command	Description	SW version
		3.02
10	Read INPUTS + OUTPUTS 16 bit	X
11	Read ADW'S 8 bit / 10 bit	X
12	INPUTS: Set trigger conditions to input sample	X
15	COUNTER - INPUTS: Initialize / read counter / pulse time channel 1..4	
20	Set 24 V OUTPUT byte - serially 16 bit	X
21	Set 24 V OUTPUT bit - serially 16 bit	X
22	Set 24 V OUTPUT bit - serially flashing 16 bit	
24	Issue 24 V OUTPUT channel 1 + 2 PWM	X
25	Set 24 V INPUT trigger threshold with DAW 8 bit	X
28	Monitor mechanical process via timeout	
30	Control M5450 MCD serial cards	
32	Universal 3 - wire data output via chip select	
34	Initialize LCD	
35	LCD text output	X
3A	Write EEPROM 1 max. 00..FF = 256 BYTES (on the controller)	X
3B	Read EEPROM 1 max. 00..FF = 256 BYTES (on the controller)	X
3C	Write EEPROM universal (not PIC compatible)	
3D	Read EEPROM universal (not PIC compatible)	
3F	Queries SW version	X
40	Output I²C external start conditions	X
41	Output I²C external stop conditions	X
42	Send I²C external data	X
43	Read I²C external data	X
44	I²C external universal input / output (execute)	X
46	Send PCF - PIO 8574 I²C external data	X
47	Read PCF - PIO 8574 I²C external data	X
48	Read I²C external keydecoder matrix 4 x 5	X
4A	Wirte EEPROM universal	X
4B	Read EEPROM universal	X
	Set outputs to default value after power up. Will be set over appropriate EEPROM cells.	X

5.1.8. Command 10: Read INPUTS + OUTPUTS 16 Bit

The inputs are cyclically recorded every 10 ms.

ATTENTION:
Channel 1..4 always fixed threshold of high = 3.8 V / low = 2.8 V, react to edge change and are always up to date.

Command: General

Data	*Parameter*	*Description*	*Value*	*Value Range*	*Information*
$12	Trig.	Trigger sign			
?	Addr Nibble	Device address		$20..$7E	
02	LENbyte	Length byte [u08]		2..255	
10	CMDbyte	Command code [u08]			
$0D	Term.	Termination			

Answer: General

Data	*Parameter*	*Description*	*Value*	*Value Range*	*Information*
$12	Trig.	Trigger sign			
?	Addr Nibble	Device address			
10	CMDbyte	Command code			
??	Dbyte1	INPUTS [u16]	highByte	0..65535	
??	Dbyte2		lowByte		
??	Dbyte3	OUTUTS [u16]	highByte	0..65535	
??	Dbyte4		lowByte		
??	Dbyte5	OUTPUT - STATUS [u08]		0 = io 1 = Overload	Status diagnostic output of high - side switches Output 1..16
$0D	Term.	Termination			

Command: Expanded

Data	*Parameter*	*Description*	*Value*	*Value Range*	*Information*
$12	Trig.	Trigger sign			
?	Addr Nibble	Device address		$20..$7E	
04	LENbyte	Length byte [u08]		2..255	
10	CMDbyte	Command code [u08]			
??	Dbyte1	Config [u08]		1	tbd
$0D	Term.	Termination			

Answer: Expanded

Data	*Parameter*	*Description*	*Value*	*Value Range*	*Information*
$12	Trig.	Trigger sign			
?	Addr Nibble	Device address			
10	CMDbyte	Command code			
??	Dbyte1	INPUTS [u16]	highByte	0..65535	
??	Dbyte2		lowByte		
??	Dbyte3	OUTUTS [u16]	highByte	0..65535	
??	Dbyte4		lowByte		
??	Dbyte5	OUTPUT - STATUS [u08]		0 = io 1 = Overload	Status diagnostic output of high - side switches Output 1..16
??	DByte6	MERKERBITS [u16]	highByte	0..65535	tbd
??	DByte7		lowByte		
$0D	Term.	Termination			

5.1.9. Command 11: Read ADW'S 8 Bit / 10 Bit

If the R - code for the ADW is set on the MIO1616, the resistance value is calculated as follows:

FullScale = 255 for 8 bit / 1023 for 10 bit

$$Rx = \frac{Mw}{FullScale - mw} \times 1000$$

Command: Read general ADW'S with 8 bit resolution

Data	*Parameter*	*Description*	*Value*	*Value Range*	*Information*
$12	Trig.	Trigger sign			
?	Addr Nibble	Device address		All printable ASCII signs	
02	LENbyte	Length byte [u08]		2..255	
11	CMDbyte	Command code [u08]			
$0D	Term.	Termination			

Answer: Read general ADW'S with 8 bit resolution

Data	*Parameter*	*Description*	*Value*	*Value Range*	*Information*
$12	Trig.	Trigger sign			
?	Addr Nibble	Device address		$20..$7E	
11	CMDbyte	Command code			
??	Dbyte1	ADW1 [u08]		0..255	8 bit 0..255 = 0..10 V
??	Dbyte2	ADW2 [u08]		0..255	
??	Dbyte3	ADW3 [u08]		0..255	
??	Dbyte4	ADW4 [u08]		0..255	
$0D	Term.	Termination			

Command: Expanded read ADW's with 10 bit resolution

Data	*Parameter*	*Description*	*Value*	*Value Range*	*Information*
$12	Trig.	Trigger sign			
?	Addr Nibble	Device address			
04	LENbyte	Length byte [u08]		2..255	
11	CMDbyte	Command code [u08]			
??	Dbyte1	Config [u08]		1	The ADW'S with 10 bit resolution are issued
$0D	Term.	Termination			

Answer: Expanded read ADW'S with 10 bit resolution

Data	*Parameter*	*Description*	*Value*	*Value Range*	*Information*
$12	Trig.	Trigger sign			
?	Addr Nibble	Device address			
11	CMDbyte	Command code			
??	Dbyte1	ADW1 [u16]	highByte	0..1023	10 bit 0..1023 = 0..10 V
??	Dbyte2		lowByte		
??	Dbyte3	ADW2 [u16]	highByte	0..1023	
??	Dbyte4		lowByte		
??	Dbyte5	ADW3 [u16]	highByte	0..1023	
??	DByte6		lowByte		
??	DByte7	ADW4 [u16]	highByte	0..1023	
??	DByte8		lowByte		

5.1.10. Command 12: INPUTS - Set Trigger Conditions to Input Sample

The MIO1616 controls the inputs cyclically and sets - providing the agreement of the trigger status - relevant output states or the corresponding flag [u16].

Priority drops in accordance with a growing index. This means that index 0 always rewrites the output status of e. g. index 1.

Trigger index 0 is loaded from the EEPROM after power up and has top priority. It can be rewritten by means of Command 12, however, it cannot be stored in the EEPROM permanently.

Permanent alteration of index 0 is only done by endorsing the relevent EEPROM cells (see annex). As for fast triggers (impulse < 20 ms) it is recommended to use channel 1..4 (up to >= 100 µs).

ATTENTION: Channel 1..4 maintains steady threshold of High = 3.8 V / Low = 2.8 V.

Command: General

Data	*Parameter*	*Description*	*Value*	*Value Range*	*Information*
$12	Trig.	Trigger sign			
?	Addr Nibble	Device address		$20..$7E	
16	LENbyte	Length byte [u08]		2..255	
12	CMDbyte	Command code [u08]			
??	Dbyte1	TRIGGER_NR [u08]		0..7	Index for selection of trigger status
??	Dbyte2	INPUT - TRIGGER [u16]	highByte	0..65535	Status of inputs to be evaluated
??	Dbyte3		lowByte		
??	Dbyte4	INPUT - MASK [u16]	highByte	0..65535	Selection of inputs to be evaluated
??	Dbyte5		lowByte		
??	Dbyte6	OUTPUT - TRIGGER [u16]	highByte	0..65535	Status of outputs to be set
??	Dbyte7		lowByte		
??	Dbyte8	OUTPUT - MASK [u16]	highByte	0..65535	Selection of outputs to be set
??	Dbyte9		lowByte		
??	Dbyte10	STATUS [u08]		0 = off 1 = on	Activate / deactivate trigger status
$0D	Term.	Termination			

Answer: General

Data	*Parameter*	*Description*	*Value*	*Value Range*	*Information*
$12	Trig.	Trigger sign			
?	Addr Nibble	Device address		$20..$7E	
12	CMDbyte	Command code			
$0D	Term.	Termination			

5.1.11. INPUTS: Set Trigger of Input Sample On / Off 16 Bit via EEPROM Cell

For security reasons is the control on triggering input sample for trigger index 0 controllable via EEPROM content. With active triggering (for example on emergency stop), this state is activated immediately after power - up.

For writing the EEPROM cells, command 3A or 4A can be used.

EEPROM cells 24c64 to MIO1616 I^2C Bus (8 kByte)

EEPROM Address	*Parameter*	*Description*	*Value*	*Value Range*	*Information*
0x0033	1	INPUT - DATA [u16]	highByte	0x00-0xFF	Status of the inputs to be evaluated
0x0034	2		lowByte	0x00-0xFF	
0x0035	3	INPUT - MASK [u16]	highByte	00x00-0xFF	Selection of the inputs to be evaluated
0x0036	4		lowByte	0x00-0xFF	
0x0037	5	OUTPUT - DATA [u16]	highByte	0x00-0xFF	Status of the outputs to be set
0x0038	6		lowByte	0x00-0xFF	
0x0039	7	OUTPUT - MASK [u16]	highByte	0x00-0xFF	Selection of the outputs to be set
0x003A	8		lowByte	0x00-0xFF	
0x003B	9	STATUS [u08]		0 = off 1 = on	Triggering inactive after power up Triggering active after power up

5.1.12. Command 15: COUNTER - INPUTS

For initialization / reading the counter / pulse time channel 1..4 out this command is set, that means measuring counter events / pulse time for channel 1..4 up to kHz.

Command:

Data	*Parameter*	*Description*	*Value*	*Value Range*	*Information*
$12	Trig.	Trigger sign			
?	Addr Nibble	Device address		$20..$7E	
10	LENbyte	Length byte [u08]		2..255	
15	CMDbyte	Command code [u08]			
??	Dbyte1	INIT[u08]		0 = i initialize 1 = query status	During the status request Dbyte 3..7 will be ignored, because all lengt byte will be set to 0 x 00 and will be not evaluated
??	Dbyte2	INPUT - CHANEL[u08]		0..3	Select input channel 1..4
??	Dbyte3	MESSART [u08]	highNibble	0 = standard counter 1 = event counter	After the power - up the counter level will increase of 1 with every edge change. Only after activating it will count.
			lowNibble	0 = all 1 = high 2 = low	Edge evaluation during every edge change Edge evaluation from low → high edge change Edge evaluation from high → low edge change
??	Dbyte4	GATE - TIME [u32]	highByte	0..0xFFFFFFFF	Gate time for measuring 32 bit
??	Dbyte5				
??	Dbyte6				
??	Dbyte7		lowByte		
$0D	Term.	Termination			

Answer:

Data	*Parameter*	*Description*	*Value*	*Value Range*	*Information*
$12	Trig.	Trigger sign			
?	Addr Nibble	Device address		$20..$7E	
12	CMDbyte	Command code			
??	Dbyte1	STATUS [u08]		0 = ready 1 = running	Measuring was valid finished Measuring is running, start edge was recognized
??	Dbyte2	VALUE [u32]	highByte	0..0xFFFFFFFF	Counter level in [n] / pulse time in [ms]
??	Dbyte3				
??	Dbyte4				
??	Dbyte5		lowByte		
$0D	Term.	Termination			

5.1.13. OUTPUT - Configure Status after Power Up Via EEPROM

The status of the outputs after the power up can be load from the EEPROM. To write the EEPROM cells choose command 3A or 4A.

EEPROM cells 24c64 of MIO1616 I^2C - Bus (8k Byte)

EEPROM Address	*Parameter*	*Description*	*Value*	*Value Range*	*Information*
0x003D	1	OUTPUT - DATA [u16]	highByte	0..65535	Status of the outputs to be set
0x003E	2		lowByte		
0x003F	3	STATUS [u08]		0 = off 1 = on	Inactive after power up Active

5.1.14. Command 20: Set 24 V Output Byte - serially 16 Bit

Set all outputs together.

Command:

Data	*Parameter*	*Description*	*Value*	*Value range*	*Information*
$12	Trig.	Trigger sign			
?	Addr Nibble	Device address		0x20..0x7F	
06	LENbyte	Length byte [u08]		2..255	
20	CMDbyte	Command code [u08]			
??	Dbyte1	OUTPUT [u16]	highByte	0..65535	Status of outputs to be set
??	Dbyte2		lowByte		
$0D	Term.	Termination			

Answer:

Data	*Parameter*	*Description*	*Value*	*Value Range*	*Information*
$12	Trig.	Trigger sign			
?	Addr Nibble	Device address		$20..$7E	
20	CMDbyte	Command code			
$0D	Term.	Termination			

5.1.15. Command 21: Set 24 V Output Bit - serially 16 - Bit

Set outputs to individual bits:

Command:

Data	*Parameter*	*Description*	*Value*	*Value Range*	*Information*
$12	Trig.	Trigger sign			
?	Addr Nibble	Device address		0x20..0x7F	
08	LENbyte	Length byte [u08]		2..255	
21	CMDbyte	Command code [u08]			
??	Dbyte1	OUTPUT [u16]	highByte	0..65535	Selection of the outputs to be set
??	Dbyte2		lowByte		
??	Dbyte3	STATUS [u08]		0 = off 1 = on	Status of the outputs to be set
$0D	Term.	Termination			

Answer:

Data	*Parameter*	*Description*	*Value*	*Value Range*	*Information*
$12	Trig.	Trigger sign			
?	Addr Nibble	Device address		$20..$7E	
21	CMDbyte	Command code			
$0D	Term.	Termination			

5.1.16. Command 22: Set 24 V Output Bit - serially Flashing 16 Bit

General:
Flash frequency will be transmitted via EEPROM cell (with a adjustable interval of 10 ms: 10 ms..2,55 sec. = 1..255)

Command: General

Data	*Parameter*	*Description*	*Value*	*Value Range*	*Information*
$12	Trig.	Trigger sign			
?	Addr Nibble	Device address		0x20..0x7F	
08	LENbyte	Length byte [u08]		2..255	
22	CMDbyte	Command code [u08]			
??	Dbyte1	OUTPUT [u16]	highByte	0..65535	Selection of the flashing outputs
??	Dbyte2		lowByte		
??	Dbyte3	STATUS [u08]		0 = off 1 = on	Activate / deactivate flashing
$0D	Term.	Termination			

Answer: General

Data	*Parameter*	*Description*	*Value*	*Value Range*	*Information*
$12	Trig.	Trigger sign			
?	Addr Nibble	Device address		$20..$7E	
22	CMDbyte	Command code			
$0D	Term.	Termination			

EEPROM Cells 24c64 of MIO1616 I2C - Bus (8 kByte)

EEPROM Address	*Parameter*	*Description*	*Value*	*Value Range*	*Information*
0x003C	1	Flash frequency [u08]	Byte	0x00-0xFF	Flash frequency of 10 ms interval (0..2550 ms)

Expanded:
Flash frequency is directly transmitted via command with parameter.

Command: Expanded

Data	*Parameter*	*Description*	*Value*	*Value Range*	*Information*
$12	Trig.	Trigger sign			
?	Addr Nibble	Device address		0x20..0x7F	
0C	LENbyte	Length byte [u08]		2..255	
22	CMDbyte	Command code [u08]			
??	Dbyte1	OUTPUT [u16]	highByte	0..65535	Selection of the flashing outputs
??	Dbyte2		lowByte		
??	Dbyte3	FLASH RATE [u16]	highByte	0..65535	High time / low time of the flash frequency in [1 ms]
??	Dbyte4		lowByte		
??	Dbyte5	STATUS [u08]		0 = off 1 = on	Activate / deactivate flashing
$0D	Term.	Termination			

Answer: Expanded

Data	*Parameter*	*Description*	*Value*	*Value Range*	*Information*
$12	Trig.	Trigger sign			
?	Addr Nibble	Device address		$20..$7E	
22	CMDbyte	Command code			
$0D	Term.	Termination			

5.1.17. Command 24: Issue 24 V OUTPUT Channel 1 + 2 PWM

Channel 1 + 2 have the same time base and also the same output frequency. The PWM can be turned on separately.

Command:

Data	*Parameter*	*Description*	*Value*	*Value Range*	*Information*
$12	Trig.	Trigger sign			
?	Addr Nibble	Device address		0x20..0x7F	
0C	LENbyte	Length byte [u08]		2..255	
24	CMDbyte	Command code [u08]			
??	Dbyte1	OUTPUT [u08]		0 = Output1 1 = Output2	Set output
??	Dbyte2	DUTY [u16]	highByte	0..100	0..100 % duty cycle in 1 % steps
??	Dbyte3		lowByte		
??	Dbyte4	FREQUENCE [u16]	highByte	0..250	0..250 Hz (limited because of HIGH side switches) in 1 Hz steps
??	Dbyte5		lowByte		
??	Dbyte6	STATUS [u08]		0 = off 1 = on	Activate / deactive PWM for chosen outputs
$0D	Term.	Termination			

Answer:

Data	*Parameter*	*Description*	*Value*	*Value Range*	*Information*
$12	Trig.	Trigger sign			
?	Addr Nibble	Device address		$20..$7E	
24	CMDbyte	Command code			
$0D	Term.	Termination			

5.1.18. Command 25: Set 24 V INPUT Trigger Threshold with DAW 8 Bit

Trigger threshold = 3,3 x DAW value (max. threshold of 10 V for inputs possible)

ATTENTION: Channel 1..4 has always a fixed threshold of high = 3,8 V; low = 2,8 V

Command: General

Data	*Parameter*	*Description*	*Value*	*Value Range*	*Information*
$12	Trig.	Trigger sign			
?	Addr Nibble	Device address		0x20..0x7F	
04	LENbyte	Length byte [u08]		2..255	
25	CMDbyte	Command code [u08]			
??	Dbyte1	DAW [u08]		0..255	DAW value * 3,3 = switching threshold for the area <= 10 V
$0D	Term.	Termination			

Answer: General

Data	*Parameter*	*Description*	*Value*	*Value Range*	*Information*
$12	Trig.	Trigger sign			
?	Addr Nibble	Device address		$20..$7E	
25	CMDbyte	Command code			
$0D	Term.	Termination			

5.1.19. Command 28: Monitor Mechanical Process via Timeout

The transaction data have to be registered in the EEPROM first (max. 32 actions see below EEPROM list).

Use Command 4A!

Now the order in which the movements should act will be transferred here (max. 32 in a row). **It has to be defined if the complete process has to be performed.**

If timeout = 0(0x0000) is set, the input status will not be queried

If timeout = 65535(0XFFFF) is set, it will be limitless waiting for the input status

Command:

Data	*Parameter*	*Description*	*Value*	*Value Range*	*Information*
$12	Trig.	Trigger sign			
?	Addr Nibble	Device address		0x20..0x7F	
08	LENbyte	Length byte [u08]		2..255	
28	CMDbyte	Command code [u08]			
??	Dbyte1	MODE [u08]		0 = initialize 1 = query status 2 = cancel process	Use for polling
??	Dbyte2	INDEX [u08]		0..32	Maximum 32 single processes possible
??	…				
??	DbyteN	INDEX [u08]			In total not more than 32 indexes are possible
$0D	Term.	Termination			

Answer:

Data	*Parameter*	*Description*	*Value*	*Value Range*	*Information*
$12	Trig.	Trigger sign			
?	Addr Nibble	Device address		$20..$7E	
22	CMDbyte	Command code			
??	Dbyte2	INDEX [u08]			Current running index
??	Dbyte1	STATUS [u08]		0 = ready n = processes outstanding 0xFF timeout	Process is finished without an error. n processes are unworked until now
$0D	Term.	Termination			

EEPROM Cells 24c64 of MIO1616 I²C - Bus (8 kByte)

EEPROM Address	*Parameter*	*Description*	*Value*	*Value Range*	*Information*
0x0100	Index 1	Delay [u16]	highByte	0..65535 [ms]	Delay before performing the movement
0x0101	Index 1		lowByte		
0x0102	Index 1	Timeout [u16]	highByte	0..65535 [ms]	Timeout for the performance of the movement 65535 (0xFFFF) means waiting limitless
0x0103	Index 1		lowByte		
0x0104	Index 1	INPUT - DATA [u16]	highByte	0..65535	Status of inputs to be valued
0x0105	Index 1		lowByte		
0x0106	Index 1	INPUT - MASK [u16]	highByte	0..65535	Selection of inputs to be valued
0x0107	Index 1		lowByte		
0x0108	Index 1	OUTPUT - DATA [u16]	highByte	0..65535	Status of output to be set
0x0109	Index 1		lowByte		
0x010A	Index 1	OUTPUT - MASK [u16]	highByte	0..65535	Selection of outputs to be set
0x010B	Index 1		lowByte		
0x010C	Index 2	Delay [u16]			
	…				
0x0190	Index 12	Delay [u16]			
0x0280	Index 32	Delay [u16]			

5.1.20. Command 30: Control M5450 MCD Serial Cards

Controll of a MCD system card with an addressable bus activation.

Command:

Data	*Parameter*	*Description*	*Value*	*Value Range*	*Information*
$12	Trig.	Trigger sign			
?	Addr Nibble	Device address		0x20..0x7F	
0E	LENbyte	Length byte [u08]		2..255	
30	CMDbyte	Command code [u08]			
??	Dbyte1	CARDS - ADDRESS [u08]		0..63	MCD BUS cards address
??	Dbyte2	DATA [u40]	highByte	0..2	Data byte 5 34 bit Shift register data M5450
??	Dbyte3			0..255	Data byte 4
??	Dbyte4			0..255	Data byte 3
??	Dbyte5			0..255	Data byte 2
??	Dbyte6		lowByte	0..255	Data byte 1
$0D	Term.	Termination			

Answer:

Data	*Parameter*	*Description*	*Value*	*Value Range*	*Information*
$12	Trig.	Trigger sign			
?	Addr Nibble	Device address		$20..$7E	
30	CMDbyte	Command code			
$0D	Term.	Termination			

5.1.21. Command 32: 3 - Wire - Data Output Via I²C EXTERN Ports

Command:

Data	*Parameter*	*Description*	*Value*	*Value Range*	*Information*
$12	Trig.	Trigger sign			
?	Addr Nibble	Device address		0x20..0x7F	
08+ n*2	LENbyte	Length byte [u08]		2..255	
32	CMDbyte	Command code [u08]			
??	Dbyte1	CONFIG [u08]	highNibble	Chip select 0 = 1 = 2 = 3 = 4 = 5 = 6 = 7 =	Data__/\/\/\/\/\/\/\/__ CS -----_____/---- CS ___/----------____ CS ----------_/-- CS _____/-__ CS ____/----------_/-- CS ------_____/-__ CS _____lo CS ----------hi
??	Dbyte2	DATA [u08]	lowNibble	Direction 0 = MSB first 1 = LSB first	By reverse data output (MSB or LSB first) only the single bytes will be reversed, not the complete output data to 8+n bits 0 x 12 will turn to 0 x 48
??	Dbyte3	ANZBITS [u08]		1..255	For sending amount of bits
??	Dbyte4			0..255	
??	…			0..255	
??	DbyteN		e	0..255	
$0D	Term.	Termination			

Answer:

Data	*Parameter*	*Description*	*Value*	*Value Range*	*Information*
$12	Trig.	Trigger sign			
?	Addr Nibble	Device address		$20..$7E	
32	CMDbyte	Command code			
$0D	Term.	Termination			

5.1.22. Command 34: Initialize LCD

The LCD is adjusted with the manufacturer basic initialization and can be descripted subsequently.

Command:

Data	*Parameter*	*Description*	*Value*	*Value Range*	*Information*
$12	Trig.	Trigger sign			
?	Addr Nibble	Device address		0x20..0x7F	
02	LENbyte	Length byte [u08]		2..255	
34	CMDbyte	Command code [u08]			
$0D	Term.	Termination			

Answer:

Data	*Parameter*	*Description*	*Value*	*Value Range*	*Information*
$12	Trig.	Trigger sign			
?	Addr Nibble	Device address		$20..$7E	
34	CMDbyte	Command code			
$0D	Term.	Termination			

5.1.23. Command 35: Output LCD POS * TEXT

Command:

Data	*Parameter*	*Description*	*Value*	*Value Range*	*Information*
$12	Trig.	Trigger sign			
?	Addr Nibble	Device address		0x20..0x7F	
04 + n	LENbyte	Length byte [u08]		2..255	
35	CMDbyte	Command code [u08]			
??	Dbyte1	COMMAND [u08]		0..255	Command byte for LCD see data sheet
?	Dbyte2	DATA [u08]		0x20..0x7F	Printable sign
?	…	DATA [u08]		0x20..0x7F	
?	DbyteN	DATA [u08]		0x20..0x7F	
$0D	Term.	Termination			

Answer:

Data	*Parameter*	*Description*	*Value*	*Value Range*	*Information*
$12	Trig.	Triggerzeichen			
?	Addr Nibble	Deviceaddresse		$20..$7E	
35	CMDbyte	Befehlscode			
$0D	Term.	Terminierung			

5.1.24. Command 3A: Write EEPROM 1 max. 00..FF = 256 BYTES (on the Controller)

It will be write on the internal EEPROM 24c64 of MIO1616.

Command:

Data	*Parameter*	*Description*	*Value*	*Value Range*	*Information*
$12	Trig.	Trigger sign			
?	Addr Nibble	Device address		0x20..0x7F	
06	LENbyte	Length byte [u08]		2..255	
3A	CMDbyte	Command code [u08]			
??	Dbyte1	ADDRESS [u08]		0..255	EEPROM address
??	Dbyte2	DATA [u08]		0..255	
$0D	Term.	Termination			

Answer:

Data	*Parameter*	*Description*	*Value*	*Value Range*	*Information*
$12	Trig.	Trigger sign			
?	Addr Nibble	Device address		$20..$7E	
3A	CMDbyte	Command code			
$0D	Term.	Termination			

5.1.25. Command 3B: Read EEPROM 1 max. 00..FF = 256 BYTES (on the Controller)

It will be read from the internal EEPROM 24c64 of MIO1616.

Command:

Data	*Parameter*	*Description*	*Value*	*Value Range*	*Information*
$12	Trig.	Trigger sign			
?	Addr Nibble	Device address		0x20..0x7F	
04	LENbyte	Length byte [u08]		2..255	
3B	CMDbyte	Command code [u08]			
??	Dbyte1	ADDRESS [u08]		0..255	EEPROM address
$0D	Term.	Termination			

Answer:

Data	*Parameter*	*Description*	*Value*	*Value Range*	*Information*
$12	Trig.	Trigger sign			
?	Addr Nibble	Device address		$20..$7E	
3B	CMDbyte	Command code			
??	Dbyte1	DATA [u08]			EEPROM content of the address
$0D	Term.	Termination			

5.1.26. Command 3F: Read SW VERSION Firmware

Command:

Data	*Parameter*	*Description*	*Value*	*Value Range*	*Information*
$12	Trig.	Trigger sign			
?	Addr Nibble	Device address		0x20..0x7F	
02	LENbyte	Length byte [u08]		2..255	
3F	CMDbyte	Command code [u08]			
$0D	Term.	Termination			

Answer:

Data	*Parameter*	*Description*	*Value*	*Value Range*	*Information*
$12	Trig.	Trigger sign			
?	Addr Nibble	Device address		$20..$7E	
3F	CMDbyte	Command code			
??	Dbyte1	DATA [u08]			Text string of the version
??	…	DATA [u08]			
??	Dbyte1	DATA [u08]			
$0D	Term.	Termination			

5.1.27. I²C General Operation

The mechanic interface works as a master. The I²C bus will be clamped on the MIO1616 via open collector pull up 4k7 ohm to 5 V. Clock - Streching by slave > 1 ms is only supported via Command 44.

5.1.28. Command 40: Output I²C External Start Conditions

Command:

Data	*Parameter*	*Description*	*Value*	*Value Range*	*Information*
$12	Trig.	Trigger sign			
?	Addr Nibble	Device address		0x20..0x7F	
02	LENbyte	Length byte [u08]		2..255	
40	CMDbyte	Command code [u08]			
$0D	Term.	Termination			

Answer:

Data	*Parameter*	*Description*	*Value*	*Value Range*	*Information*
$12	Trig.	Trigger sign			
?	Addr Nibble	Device address		$20..$7E	
40	CMDbyte	Command code			
$0D	Term.	Termination			

5.1.29. Command 41: Output I²C External Stop Conditions

Command:

Data	*Parameter*	*Description*	*Value*	*Value Range*	*Information*
$12	Trig.	Trigger sign			
?	Addr Nibble	Device address		0x20..0x7F	
02	LENbyte	Length byte [u08]		2..255	
41	CMDbyte	Command code [u08]			
$0D	Term.	Termination			

Answer:

Data	*Parameter*	*Description*	*Value*	*Value Range*	*Information*
$12	Trig.	Trigger sign			
?	Addr Nibble	Device address		$20..$7E	
41	CMDbyte	Command code			
$0D	Term.	Termination			

5.1.30. Command 42: Send I²C External Data

Wirte max. 255 bytes on the I^2C bus.

Command:

Data	*Parameter*	*Description*	*Value*	*Value Range*	*Information*
$12	Trig.	Trigger sign			
?	Addr Nibble	Device address		0x20..0x7F	
04 + 2*n	LENbyte	Length byte [u08]		2..255	
42	CMDbyte	Command code [u08]			
??	Dbyte1	DATA [u08]			Max. 255 bytes data
??	…	DATA [u08]			
??	DbyteN	DATA [u08]			
$0D	Term.	Termination			

Answer:

Data	*Parameter*	*Description*	*Value*	*Value Range*	*Information*
$12	Trig.	Trigger sign			
?	Addr Nibble	Device address		$20..$7E	
42	CMDbyte	Command code			
??	Dbyte1	EERORSTATUS [u08]		0 = io 1 = ACK - Error 2 = Clock stretch Timeout	Write error status for I²C
$0D	Term.	Termination			

5.1.31. Command 43: Read I²C External Data

Between the bytes “I²C - ACK“ will be send and after the last byte “NOACK“.

Command:

Data	*Parameter*	*Description*	*Value*	*Value Range*	*Information*
$12	Trig.	Trigger sign			
?	Addr Nibble	Device address		0x20..0x7F	
02	LENbyte	Length byte [u08]		2..255	
43	CMDbyte	Command code [u08]			
??	Dbyte1	AMOUNT [u08]		1..255	Amount of bytes to be read
$0D	Term.	Terminierung			

Answer:

Data	*Parameter*	*Description*	*Value*	*Value Range*	*Information*
$12	Trig.	Trigger sign			
?	Addr Nibble	Device address		$20..$7E	
43	CMDbyte	Command code			
Optional	Dbyte1	EERORSTATUS [u08]		0 = io	Error status is not valued
??	Dbyte2	DATA [u08]		0..255	
??	…			0..255	
??	DbyteN	DATA [u08]		0..255	
$0D	Term.	Termination			

5.1.32. Command 44: I²C External Universal Input / Output (Execute)

Universal operation of the I²C interface. The command line is interpreted and output accordingly. This command should be used for **new applications** and **replaces command 40, 41, 42, 43**.

Following parameters are available:

With Data:='ISA000SA1Q07RP' this command effects the follow:

I SDA, SCL ports initialize

Cn Adjust clock stretch: 0 = 1 ms; 1 = 10 ms; 2 = 100 ms; 3 = 1000 ms; 4 = 3000 ms

After execute command 44 clock stretch return to 1 ms

S Generate start conditions

Send data after start conditions

A0 Send byte A0 (Addressing of I²C element writing access)

00 Send byte 00 (second part of the address)

S Repeated generating start conditions

After repeated start conditions to send data

A1 Send byte A1 (Addressing of I²C element reading access)

Qnn Read byte with “ACK“ (in total nn times)

R Read byte with “ACK“ - signalized end of readings

P Generate stop conditions

With Data: = 'ISA000SA1Q07RP' this command effects the follow:

The execute function reads 8 bytes from the I²C element with the address A0.

Command:

Data	*Parameter*	*Description*	*Value*	*Value Range*	*Information*
$12	Trig.	Trigger sign			
?	Addr Nibble	Device address		$20..$7E	
??	LENbyte	Length byte [u08]		2..255	
44	CMDbyte	Command code [u08]			
??	Dbyte1	[u08]			
??	…	[u08]			
??	DbyteN	[u08]			
$0D	Term.	Termination			

Answer:

Data	*Parameter*	*Description*	*Value*	*Value Range*	*Information*
$12	Trig.	Trigger sign			
?	Addr Nibble	Device address		$20..$7E	
12	CMDbyte	Command code			
	Dbyte1	EERORSTATUS [u08]		0 = io 1 = ACK - Error 2 = Clock stretch Timeout	I²C error status
	Dbyte N	[u08]			Depending on the command line the answer takes place
$0D	Term.	Termination			

5.1.33. Command 46: Set PCF8574 I²C Extern Bit - Serially 8 Bit

Command:

Data	*Parameter*	*Description*	*Value*	*Value Range*	*Information*
$12	Trig.	Trigger sign			
?	Addr Nibble	Device address		0x20..0x7F	
08	LENbyte	Length byte [u08]		2..255	
46	CMDbyte	Command code [u08]			
??	Dbyte1	HW ADDRESS [u08]		0..255	PCF8574 I²C HW address HW address A0, A1, A2 * 2 multiply upon delivery
??	Dbyte2	OUTPUT [u08]		0..255	Selection of outputs to be set
??	Dbyte3	STATUS [u08]		0 = clr 1 = set bit 2 = set byte direct	Status of outputs to be set Set / delete single bits The whole output byte will be set as stated in OUTPUT
$0D	Term.	Termination			

Answer:

Data	*Parameter*	*Description*	*Value*	*Value Range*	*Information*
$12	Trig.	Trigger sign			
?	Addr Nibble	Device address		$20..$7E	
46	CMDbyte	Command code			
??	Dbyte1	EERORSTATUS [u08]		0 = io 1 = ACK - Error 2 = clock stretch Timeout	Write error status for I²C
$0D	Term.	Termination			

5.1.34. Command 47: Read PCF8574 I²C EXTERN 8 Bit

For compatility reasons, no error stauts will be issued here.

Command:

Data	*Parameter*	*Description*	*Value*	*Value Range*	*Information*
$12	Trig.	Trigger sign			
?	Addr Nibble	Device address		0x20..0x7F	
04	LENbyte	Length byte [u08]		2..255	
47	CMDbyte	Command code [u08]			
??	Dbyte1	HW ADDRESS [u08]		0..255	PCF8574 I²C HW address HW address A0, A1 ,A2 * 2 multiply upon delivery
$0D	Term.	Termination			

Answer:

Data	*Parameter*	*Description*	*Value*	*Value Range*	*Information*
$12	Trig.	Trigger sign			
?	Addr Nibble	Device address		$20..$7E	
47	CMDbyte	Command code			
??	Dbyte1	EERORSTATUS [u08]		0 = io 1 = ACK - Error 2 = clock stretch Timeout	Write error status for I²C
??	Dbyte2	DATA [u08]		0..255	
??	…			0..255	
??	DbyteN	DATA [u08]		0..255	
$0D	Term.	Termination			

5.1.35. Command 48: Read I²C EXTERN KEYDECODER MATRIX 5 x 4

Key decoder with PCF8574

```
+-----+
¦    7+---( x)----------------------------------+
¦     ¦                                         ¦
¦    6+---( x)---------------------------+      ¦
¦     ¦                                  ¦      ¦
¦    5+---( x)-------------------+       ¦      ¦
¦     ¦                          ¦       ¦      ¦
¦    4+---( x)------------+      ¦       ¦      ¦
¦     ¦            ¦20     ¦16    ¦12     ¦8     ¦4
¦    3+---( x)----o-------o------o-------o------o-
¦     ¦            ¦19     ¦15    ¦11     ¦7     ¦3
¦    2+---( x)----o-------o------o-------o------o-
¦     ¦            ¦18     ¦14    ¦10     ¦6     ¦2
¦    1+---( x)----o-------o------o-------o------o-
¦     ¦            ¦17     ¦13    ¦9       ¦5    ¦1
¦    0+---( x)----o-------o------o-------o------o-
+-----+            ¦
PCF8574         GND
```

Command:

Data	*Parameter*	*Description*	*Value*	*Value Range*	*Information*
$12	Trig.	Trigger sign			
?	Addr Nibble	Device address		0x20..0x7F	
04	LENbyte	Length byte [u08]		2..255	
48	CMDbyte	Command code [u08]			
??	Dbyte1	HW ADDRESS [u08]		0..255	PCF8574 I²C HW address HW Address A0, A1 ,A2 * 2 multiply upon delivery
$0D	Term.	Termination			

Answer:

Data	*Parameter*	*Description*	*Value*	*Value Range*	*Information*
$12	Trig.	Trigger sign			
?	Addr Nibble	Device address		$20..$7E	
48	CMDbyte	Command code			
??	Dbyte1	EERORSTATUS [u08]		0 = io 1 = ACK - Error 2 = clock stretch Timeout	Write error status for I²C
??	Dbyte2	KEYCODE[u08]		0x00..0x20	
$0D	Term.	Termination			

5.1.36. Command 4A: Write EEPROM Universal (Incompatible)

The intern EEPROM of the ATMEL controller (4K) as well as the expansion EEPROM 24c64 (8K) can be contacted via MIO1616. In addition, any EEPROM connected to the external I²C - BUS can be accessed. Write max. 32 bytes in a row. Note the pagesize of the used EEPROM.

Command:

Data	*Parameter*	*Description*	*Value*	*Value Range*	*Information*
$12	Trig.	Trigger sign			
?	Addr Nibble	Device address		0x20..0x7F	
0A +2*n	LENbyte	Length byte [u08]		2..255	
4A	CMDbyte	Command code [u08]			
??	Dbyte1	CONFIG [u08]	highNibble	0 = ext 1 = int 2 = Controller	EEPROM 24c… at external I²C - bus EEPROM 24c64 to MIO1616 I²C - BUS (8 kByte) 16 Byte page EEPROM ATMEL (8 kByte) 32 Byte page
			lowNibble	0 = 8 Bit I²C address 1 = 16 Bit I²C address	Up 24c64 to use
??	Dbyte2	HW ADDRESS [u08]		0..255	I²C HW address of EEPROM (set 0x00 for ATMEL EEPROM) EEPROM 24c64 auf MIO1616 I²C - BUS (8 kByte) 16 byte page = 0 x A0
??	Dbyte3	HighByte - ADDRESS [u08]		0..255	
??	Dbyte4	LowByte - ADDRESS [u08]		0..255	
??	Dbyte5	DATA [u08]		0..255	
??	…			0..255	
??	DbyteN	DATA [u08]		0..255	
$0D	Term.	Termination			

Answer:

Data	*Parameter*	*Description*	*Value*	*Value Range*	*Information*
$12	Trig.	Trigger sign			
?	Addr Nibble	Device address		$20..$7E	
4A	CMDbyte	Command code			
??	Dbyte1	EERORSTATUS [u08]		0 = io 1 = ACK - Error 2 = clock stretch Timeout	Error status for I²C EEPROMS
$0D	Term.	Termination			

5.1.37. Command 4B: Read EEPROM Universal (Incompatible for PIC)

Command:

Data	*Parameter*	*Description*	*Value*	*Value Range*	*Information*
$12	Trig.	Trigger sign			
?	Addr Nibble	Device address		0x20..0x7F	
0C	LENbyte	Length byte [u08]		2..255	
4B	CMDbyte	Command code [u08]			
??	Dbyte1	CONFIG [u08]	highNibble	0 = ext 1 = int 2 = Controller	EEPROM 24c… at external I²C - BUS EEPROM 24c64 at MIO1616 I²C - BUS (8 kByte) 16 byte page EEPROM ATMEL (8 kByte) 32 byte page
			lowNibble	0 = 8 Bit I²C address 1 = 16 Bit I²C address	Up 24c64 to use
??	Dbyte2	HW ADDRESS [u08]		0..255	I²C HW address des EEPROM (set 0 x 00 für ATMEL EEPROM) EEPROM 24c64 on MIO1616 I²C - BUS (8 kByte) 16 byte page = 0 x A0
??	Dbyte3	HighByte - ADDRESS [u08]		0..255	
??	Dbyte4	LowByte - ADDRESS [u08]		0..255	

??	Dbyte5	AMOUNT [u08]		1..255	Amount bytes for reading
$0D	Term.	Termination			

Answer:

Data	*Parameter*	*Description*	*Value*	*Value Range*	*Information*
$12	Trig.	Trigger sign			
?	Addr Nibble	Device address		$20..$7E	
4B	CMDbyte	Command code			
??	Dbyte1	EERORSTATUS [u08]		0 = io 1 = ACK - Error 2 = clock stretch Timeout	Error status for I²C EEPROMS
??	Dbyte2	DATA [u08]		0..255	
??	…			0..255	
??	DbyteN	DATA [u08]		0..255	
$0D	Term.	Termination			

6. Technical Data

General		
Operating voltage	10..32 V	Note polarity! Separated suply of the operating voltage for output 1 to 8, output 9 to 16, supply of the control electronic
Closed current consumption	< = 100 mA	Additional load current
Interfaces		
Serial protocol	RS232 19200; 57600; 115200; Baud, 8 data, no parity, 1 stop	With S1 adjustable
Addressing	Max. 8 interfaces addressable	Adr. 0..7 with S1 adjustable
Serial data INPUT	Serial data from PC	
USB	Serial data from PC	FTDI serial COM device
Serial data OUTPUT	Forwarding data to additional IO cards	Configurable RS232 / RS485
LCD / IO connection	LC - Displays, IIC BUS, 3 - Wire	Text output max. 40 character per command max. voltage range on the IO ports 5 V
Data Outputs		
Maximum sum of output current channel 1..8	4 A	Secure by polyfuse 4A
Maximum sum of output curent channel 9..16	4 A	Secure by polyfuse 4A
Maximum output current per channel	0,7 A	Channel 1..16 short circuit / overload - proof
2 x PWM outputs alternative	10..500 Hz / 0..100 %	Channels 1+2 Standard output for all 1 ms
Data Inputs		
Input voltage range channel 1..16	Trigger threshold 1..10 V	Trigger threshold 0..10 V adjustable Are read in every 10 ms Input resistance = 27 kΩ
Fast trigger inputs channel 1..4		Inputs as fast event counters / trigger up to 10 kHz trigger threshold Vih = 3,8 V Vil = 2,8 V Input resistance = 20 kΩ
Supply of the initiators	Together wirh the control electronics	Secure by polyfuse 4A
Analog inputs	1.Configurable as constant current source (1 mA ± 5 %) to coding with resistores (max. 22 kΩ). 2. Analog input 0..10 V	With Jumper J1..J4 adjustable Resolution 8 Bit standard, 10 bit with expanded command set Input resistance = 200 kΩ
Dimensions		
Width / Depth / Height	175 mm / 125 mm / 70 mm	
Mounting	On a top - hat rail 35 mm	